Acme Sanitary Ware Co. Ltd.
1/F, Acme Building, 22-28 Nanking Street, Kowloon, Hong Kong
Tel: 2388 7171 Fax: 2710 8012
Email: acme@acmesanitary.com.hk
Website: www.acmesanitary.com.hk
Since 1949

GROHE Pure Freude an Wasser

PROJECT		REF		REV	ITEM CODE	
LOCATION		DATE			PAGE	

SANITARY WARE SPECIFICATION SHEET

Item Descriptions	GROHE (Germany) "Essence" Brushed nickel 1/2" single-lever shower mixer trim with concealed body
Dimensions	L158 x W136 x H173 mm
Model	24057EN1 (Shower Mixer) 35600000 (Mounting box)
Finish	Brushed Nickel
Country of origin	Germany
Manufacturer	GROHE Limited
Supplier	Acme Sanitary Ware Co. Ltd Mr. Eric Wong/ Mr. Wilson Hung
Contact Tel/Fax	(852) 2388-7171 / (852) 2710-8012
E-mail	acme@acmesanitary.com.hk
Website	www.acmesanitary.com.hk

"Essence"
single-lever shower mixer trim
- set for final installation for
- GROHE Rapido SmartBox 35 600 000
- **GROHE SilkMove** 46 mm ceramic cartridge
- **GROHE StarLight** finish
- wall escutcheon with **GROHE QuickFix** (covered escutcheon- and shaft sealing, covered fixing)
- metal escutcheon, retroactively 6° adjustable
- metal lever
- flow performance: outlet B or C = 30 l/min
- **without roughing-in-set**



GROHE Rapido SmartBox



- Universal rough-in box, 1/2"
- 3 outlets 1/2"
- 2 inlets below, 1/2"
- installation depth 75-105 mm
- connection unit in DR brass
- pre-mounted flushing plug
- stable build-in box and protective cover
- fixing options for solid walls and dry cladding
- gasket
- without set for final installation

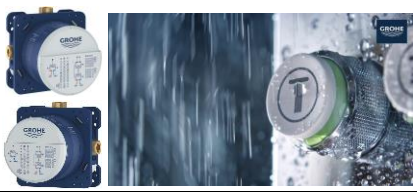



Illustration/ Drawing



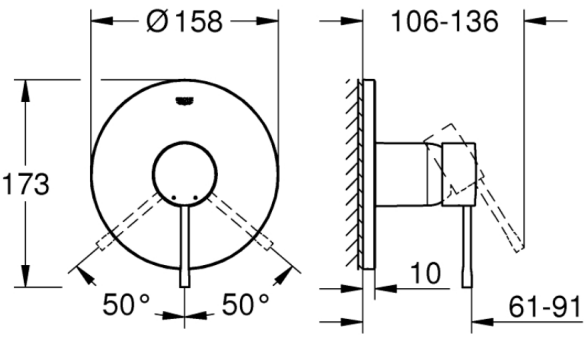

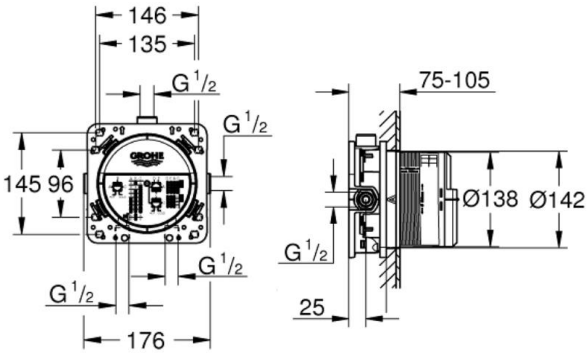

Colour options:
- 001 I StarLight Chrome
- DC1 I SuperSteel
- DA1 I Warm Sunset
- A01 I Hard Graphite
- AL1 I Brushed Hard Graphite
- GL1 I Cool Sunrise
- GN1 I Brushed Cool Sunrise
- DL1 I Brushed Warm Sunset
- BE1 I Polished Nickel
- EN1 I Brushed Nickel

Note: YouTube (GROHE Essence) https://www.youtube.com/watch?v=GZoUbmtWwZ4
YouTube (Rapido SmartBox | Installation Video) https://www.youtube.com/watch?v=KsWdVrq9fVI

** All information of the above is for the reference only. No prior notice is made if any changes.*

Acme Sanitary Ware Co. Ltd.
1/F, Acme Building, 22-28 Nanking Street, Kowloon, Hong Kong
Tel: 2388 7171 Fax: 2710 8012
Email: acme@acmesanitary.com.hk
Website: www.acmesanitary.com.hk
Since 1949

GROHE Pure Freude an Wasser

PROJECT		REF		REV	ITEM CODE	
LOCATION		DATE			PAGE	

SANITARY WARE SPECIFICATION SHEET

GROHE
ESSENCE



UNDERSTATED ELEGANCE

Classic lifestyle, gently interpreted. For people who are attracted by clear, visually pleasing designs, GROHE Essence brings aesthetics without pretension. Complete bathrooms in this range use balanced, modern styling and create space for inventive furnishing ideas and innovative technologies.

MORE THAN 200 POSSIBLE COMBINATIONS WITH GROHE RAPIDO SMARTBOX

As concealed mixing valves for showers and bathtubs are becoming increasingly successful, concealed units are in great demand. With its minimum installation depth of only 75mm, GROHE's Rapido Smartbox can be easily installed for all showers/bathtubs. The Rapido Smartbox concealed body allows you to control up to three water outlets and is compatible with all GROHE concealed models.







SPARE PARTS

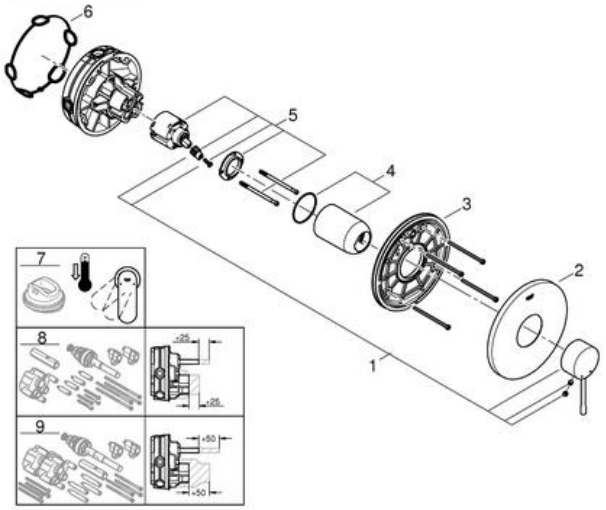

Pos.-nr.	Prod. description	Order-nr.
1	Lever	46915000
2	Escutcheon	48428000
3	Mounting plate	48439000
4	Cap	02693000
5	Cartridge	46048000
6	Seal	48360000
7	Temperature limiter	46308000*
8	Universal extension set single-lever mixers, 25 mm	14056000*
9	Universal extension set single-lever mixers, 50 mm	14057000*

* Optional accessories

Note:

** All information of the above is for the reference only. No prior notice is made if any changes.*

Acme Sanitary Ware Co. Ltd.
1/F, Acme Building, 22-28 Nanking Street, Kowloon, Hong Kong
Tel: 2388 7171 Fax: 2710 8012
Email: acme@acmesanitary.com.hk
Website: www.acmesanitary.com.hk
Since 1949

GROHE Pure Freude an Wasser

PROJECT		REF		REV	ITEM CODE	
LOCATION		DATE			PAGE	

SANITARY WARE SPECIFICATION SHEET



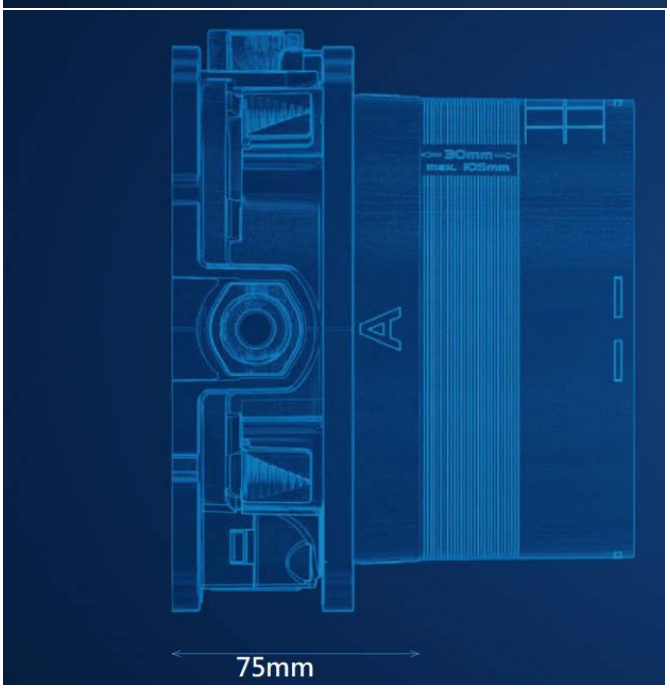



Note:

** All information of the above is for the reference only. No prior notice is made if any changes.*

水務署
Water Supplies Department

總部 Headquarters
[illegible]士打道七號入境事務大樓 48 樓
[illegible]n Tower, 7 Gloucester Road, Wan Chai, Hong Kong

ACME SANITARY WARE CO., LTD. 2388 7171

本署檔號 Our ref. : [illegible]2) in WS[illegible]1/2024 T/J(890/2024)
來函檔號 Your ref. :

電話 Tel. :
傳真 Fax. : 2824 0578

25 September 2024

Approval of "GROHE" Shower Mixers
(General Acceptance No. C20240661)

Your E-Application [file-id: ETJ-GA-20240901-278] dated 3 September 2024 refers.

Having considered the test report ref. J29986 issued on 3 September 2024 by Nutek Systems (HK) Ltd., this Authority accepts that the fittings described below comply with, and their use when correctly installed does not contravene, the Waterworks Ordinance and Regulations.

Name of Manufacturer:	Grohe AG
Country of Origin:	Germany
Brand:	Grohe
Details of Fittings:	1/2" Single lever shower mixer
Model:	35600000 + 24044XXX, 35600000 + 24061XXX (where "XXX" denotes the code of colour)

香港環境卓越大獎
10 years+ 同心展望 caringorganisation

35600000 + 24042XX3, 35600000 + 24046XX3,
35600000 + 24048XX3, 35600000 + 24051XX2,
35600000 + 24053XX1, 35600000 + 24055XX2,
35600000 + 24057XX1, 35600000 + 24059XX3,
35600000 + 24063XX1, 35600000 + 24161XX1,
35600000 + 24168XX1
(where "XX" denotes the code of colour)

Body Markings: GROHE

Expiry Date: 15 July 2029

This Authority hereby permits the use of the above fittings in fresh water plumbing systems subject to full adherence to Waterworks installation requirements. In particular, you are required to draw your customers' attention to the following requirement-

> "The cold water supply to the fittings shall be drawn from the same source that supplies the hot water apparatus so as to provide a balanced pressure and to obviate the risk of scalding in the event of a restriction or failure in the water supply." AND

> "The shower head or handspray should not be placed in submerged conditions and should be securely fixed to the original position after use."

A condition of this acceptance is that the fittings to be installed shall be replicas of the samples as certified by the testing agent mentioned above and without modifications. This acceptance may be withdrawn at any time if the standard of the fittings installed fails to meet that of the approved samples or if the fittings are found to be unsuitable for use in fresh water plumbing systems.

This acceptance is only applicable to the main body of the fittings, unless otherwise specified.

For the use of the fittings in any project, the General Acceptance Number of this letter must be quoted as a means of identification of acceptance of the fittings by this Authority.

Should you have any enquiries, please contact our Engineer Mr Albert CHOW at tel. no. 3583 4086.

Yours faithfully,

(Terry KUNG)
for Director of Water Supplies

Encl.

c.c. WSD 3321/1/82] - without catalogue
ME/MC] - with soft copy only